Fabry-Perot interferometer

INTRODUCTION

The Fabry-Perot interferometer, designed in 1899 by C. Fabry and A. Perot, represents a significant improvement over the Michelson interferometer. The difference between the two lies in the fact that the Fabry-Perot design contains plane surfaces that are all partially reflecting so that multiple rays of light are responsible for creation of the observed interference patterns. The general theory behind interferometry still applies to the Fabry-Perot model, however, these multiple reflections reinforce the areas where constructive and destructive effects occur making the resulting fringes much more clearly defined. This, as will be discussed later, allows for much more precise measurements of wavelength, and free spectral range.

Strictly speaking, a Fabry-Perot by definition consists of two planar mirrors, but the term is nowadays very frequently also used for resonators with curved mirrors. From a theoretical viewpoint, plane-plane optical resonators are special in the sense that their cavity modes extend up to the edges of the mirrors and experience some diffraction losses. However, Fabry-Perots are usually used with input beams of much smaller diameter, which are actually not really matched to the cavity modes. For the usually small mirror spacings, where diffraction within a round trip is rather weak, this deviation does not matter that much.

For optical spectrum analysis, the Fabry-Perot interferometer is often made short enough to achieve a sufficiently large free spectral range; the bandwidth of the resonances is then the free spectral range divided by the finesse. Due to the high reflectivities, the finesse can be rather high (well above 1000, with supermirrors even much higher). For a given finesse, one can improve the wavelength resolution by increasing the mirror distance, but only at the cost of reducing the free spectral range, i.e., the range within which unique spectral assignment is possible.

Much of what we know about the structure of atoms and molecules comes from a study of the spectral lines they emit. Many decades of observations have shown that the spectrums of atomic and molecular systems have an enormous amount of fine structure which cannot easily be seen. For example the most important feature in the spectrum of sodium looks, in many spectrometers, like a single bright yellow line of wavelength of 589 nm. But on finer resolution it is seen to be a doublet, two distinct lines at 589.0 nm and 589.6 nm. Furthermore, if you apply a strong magnetic field to the system, you will find that some of the lines split into several different wavelengths, separated by perhaps 0.01 nm.

Concentric ring pattern produced by a Fabry-Perot etalon

In order to do useful spectroscopy on such systems therefore, you need a spectrometer with a resolution of something like 0.01 nm. One such is the Fabry-Perot interferometer.

Properties of Fabry-Perot Interferometer

For high resolution spectroscopy where a resolution of MHz to Ghz is required, a Fabry-Perot interferometer (FP) is used. The FP consists of two plane mirrors mounted accurately parallel to one another, with an optical spacing L1 between them. For a given spacing L1 the interferometer will transmit only certain wavelengths λ as determined by

$$T = \frac{\tau_0}{1 + (4F^2/\pi^2)\sin^2(2\pi L_1/\lambda)}$$

where t^0 (<1) is the maximum possible transmission determined by losses in the system, and F, the finesse, is a quality factor depending primarily on the mirror reflectivity and flatness. Equation 1 shows that only those wavelengths satisfying

$$L_1 = \tfrac{1}{2} p \lambda$$

for integral values of p, will be transmitted. This is illustrated below.

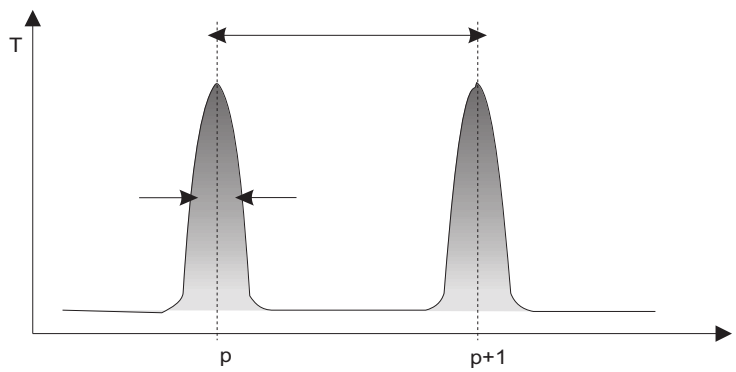

The finesse F is related to the spacing between successive transmitted wavelengths λλ (known as the free spectral range, FSR) and the width dλ of a given transmission peak by

$$F = \Delta\lambda/\delta\lambda$$

The FP is used as a spectrometer by varying the spacing L1 so as to scan the light intensity at different wavelengths. However it is immediately apparent that the measured intensity at a given spacing is the sum of the intensities at all wavelengths satisfying condition 2. An un ambigious interpretation of the spectrum is thus impossible unless it is known a priori that the spectrum of the light lies entirely within a wavelength spread < λλ. It is true that since

$$\Delta\lambda = \lambda^2/2L_1$$

one may make λλ arbitrarily large by decreasing L1. However dλ increases proportional to λλ and so the resolution decreases. In fact equation 3 shows that the ratio between FSR, λλ and the resolution dλ , is just the finesse F. In practice F cannot be made much greater than about 100 due to limitations on the quality of mirror substrates and coatings. The relationship between FSR and resolution is thus fixed within limits determined by the achievable values of F.

Vibration isolation

The interferometer requires a quiet, vibration free environment. The better solution is to mount the optical table rigidly on the floor, but to isolate the interferometer from the optical table. Note that an enclosure is required around the interferometer to protect it from sound waves which can excite high-frequency resonances in the system.

Plate Flatness

Due to the multiple reflections in a Fabry-Perot interferometer, deviations in the homogeneity of the reflecting surfaces are 'multiplied', too.

Tilting

When the system is not proper aligned the fringe will not appear. A pointed laser pass through the etalon appears as many spots. Adjust the tilting knobs properly all the spots comes in to the center spot of the etalon. Insert the lense cap in to the laser capsule. The diverged output of laser beam produce the fringe with observable size.

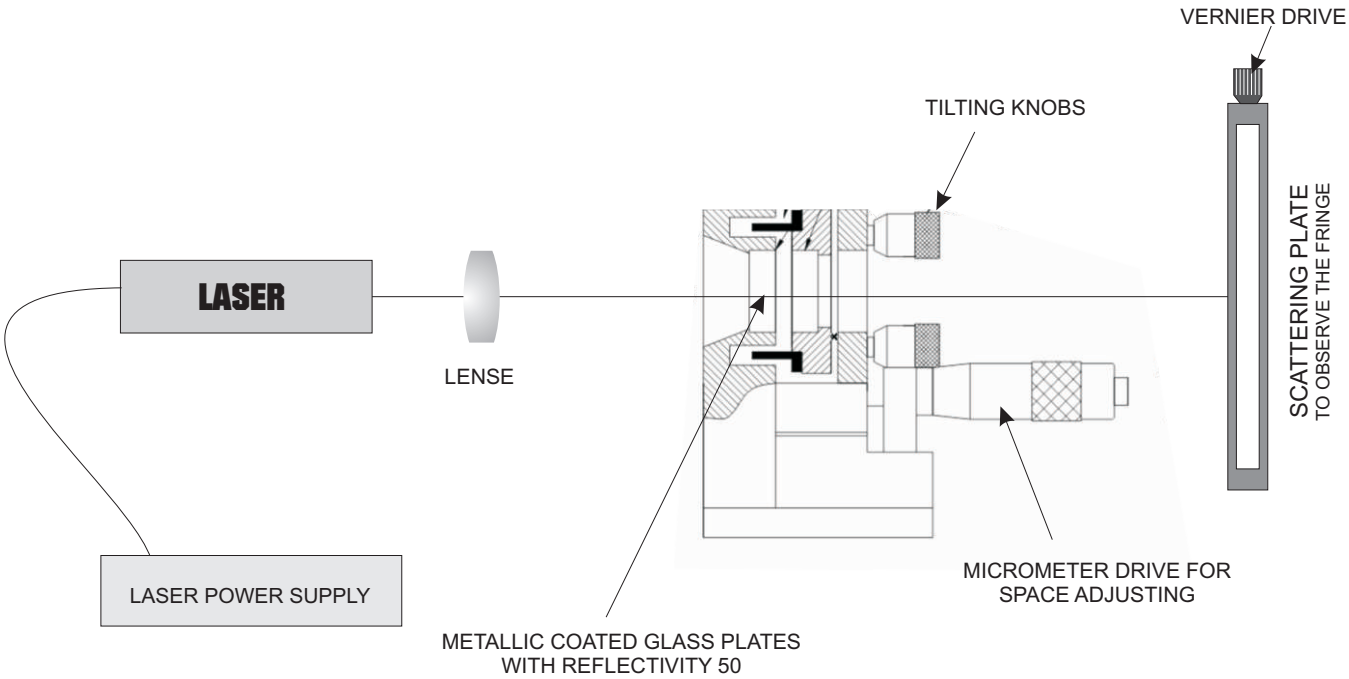

FIG. Experimental arrangement for FP Interferometer.

Note

In actual setup the laser capsule contain a diverging lens this will enough to illuminate the etalon plate.

SPECIFICATIONS

Fabrey-Perot Etalon

Dia:25mm
Clear aperture:20mm
Thickness:8mm
Surface finish: /10
Coatin to give R/T ratio 50/50
Spacer thickness: 0-10mm

For special application use a clear optical fused silica, which has a very low thermal expansion of 0.55 x 10-6 per °C. Being highly durable and having good resistance to abrasion makes fused silica a good choice for applications that are high in wear and tear.

Experiments possible

- To find the wavelength of laser light.
- To find the air spacing 'd' of etalon
- To compare the quality of laser sorces.
- To find the finessie and free spectral range (FSR) of etalon from the fringe calibration.

Etc.

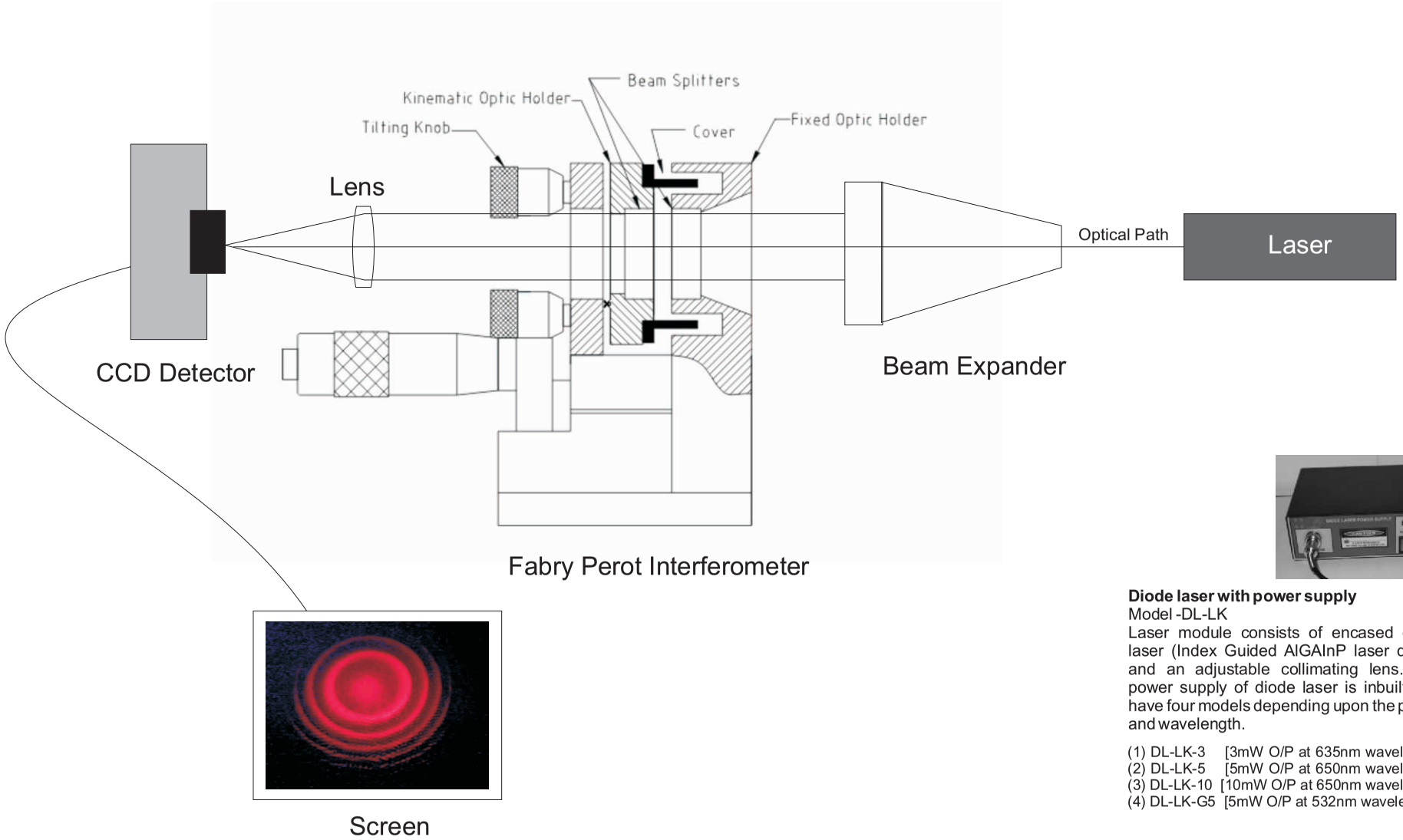

Diode laser with power supply
Model -DL-LK
Laser module consists of encased diode laser (Index Guided AlGAInP laser diode) and an adjustable collimating lens. The power supply of diode laser is inbuilt. We have four models depending upon the power and wavelength.

(1) DL-LK-3 [3mW O/P at 635nm wavelength]
(2) DL-LK-5 [5mW O/P at 650nm wavelength]
(3) DL-LK-10 [10mW O/P at 650nm wavelength]
(4) DL-LK-G5 [5mW O/P at 532nm wavelength]

Experimental arrangement for Fabry Perot Interferometer with video o/p
If you want to purchase the computer interfacing unit and software please specify it.

Fabry Perot Interferometer Construction Details

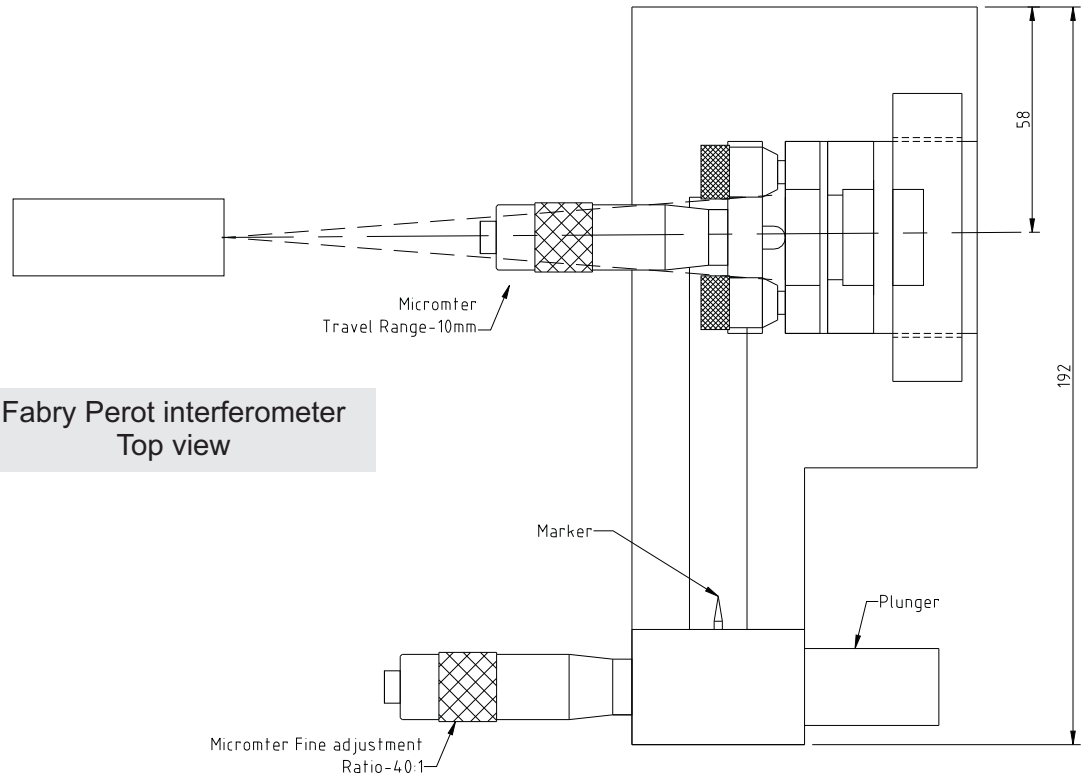

Fabry Perot interferometer
Top view

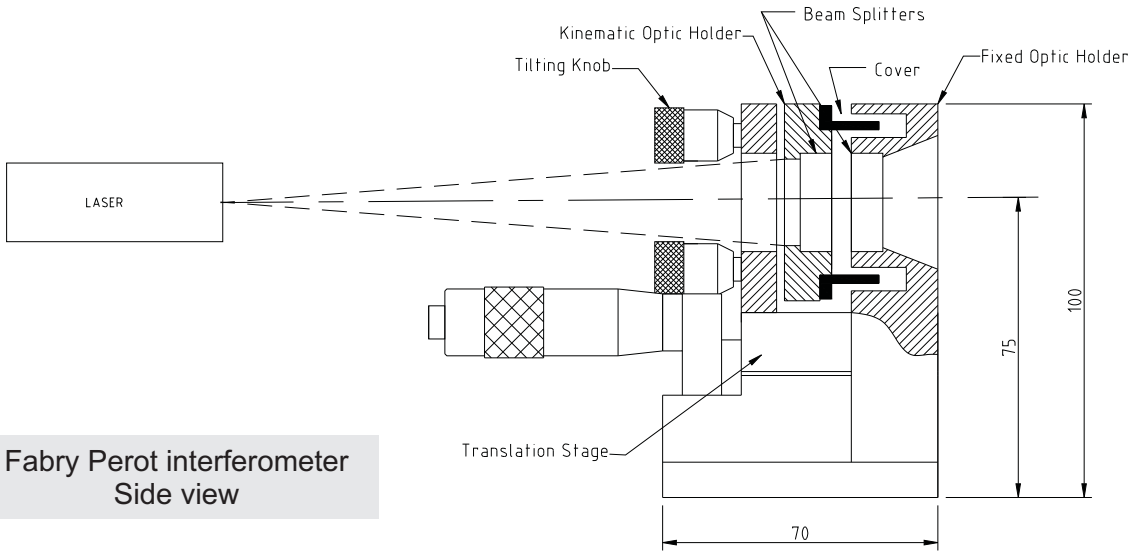

Fabry Perot interferometer
Side view

In the movable mirror mount, it is mounted in a translation stage. The micrometer shaft actuates a lever arm which pushes the translation stage carrying the beam splitter. Here 10 micron on the thimble(one division) is equal to 0.35 micron on the translation stage. Ie when we move one step on the micrometer, beam splitter is moved to 0.35 micron.

Determination of distance between the plates of fabry perot etalon, FSR (Free Spectral range), Finesse etc. of fabry perot etalon.

From the theory

M = 2d cos

As increses , m decreases and hence the order of the ring dimnishes as their radi increases. Then the integer nearest to 2d/ will be the order of the fringe system at the center. Consider the m'th ring

$$M = 2d \cos_{m}$$

For successive rings

$$(M+1) = 2d \cos_{m+1}$$

$$(M+2) = 2d \cos_{m+2}$$

$$(M+3) = 2d \cos_{m+3}$$

.....

So that

$$= 2d [\cos m - \cos_{m+1}$$

$$2 = 2d [\cos m - \cos_{m+2}$$

$$= 2d [\cos m - \cos_{m+3}$$

.....

$$n = 2d [\cos m - \cos_{m+n}]$$

$$n = 2d/ [\cos m - \cos_{m+n}]$$

$\tan\ _m = \ _m/D$

$\cos^2\ _m = 1/(1+\tan^2\ _m)$

When 'D' is large

$_m = \ _m/D$

So,

$\cos^2\ _m = 1/[1+(\ _m^2/D^2)]$

$\cos\ _m = \{1/[1+(\ _m^2/D^2)]\}^{-1/2}$

$1-(\ _m^2/2D^2)$

$n = 2d/\ [1-(\ _m^2/2D^2) - \{1-(\ _{m+n}^2/2D^2)\}$

$n = 2d/2D^2\ [\ _{m+n}^2 - \ _m^2]$

$n = d/D^2\ [\ _{m+n}^2 - \ _m^2]$

$n = d/D^2\ [\ _n^2]$

$_n^2 = \ _{m+n}^2 - \ _m^2$

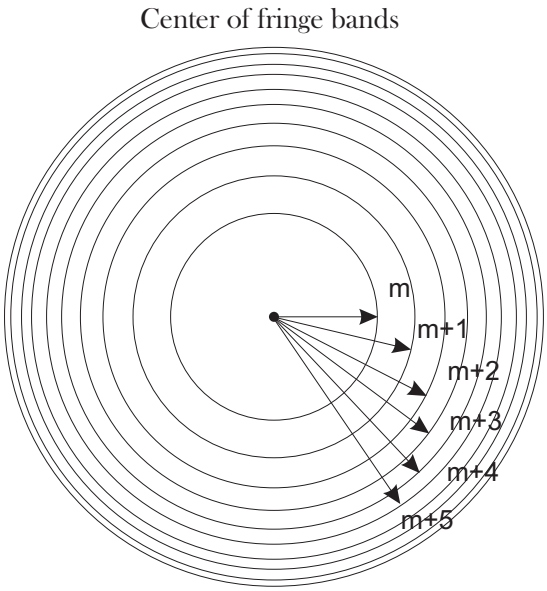

Line drawing of Fabrey Perot fringe pattern

Plot n Vs $_n^2$ is a straight line with the slope d/D^2 . From which we can calculate 'd'. Knowing 'd' the order of the center of the fringe can be evaluated as 2d/

Free Spectral Range

The resolution of a Fabry-Perot plate can be improved by increasing the optical path difference between the two reflecting surfaces. But, doing this, also the interference order is increased, leading to more problems with overlapping orders. As a measure for the useful working range (no overlapping orders) the Free Spectral Range of an instrument is defined.

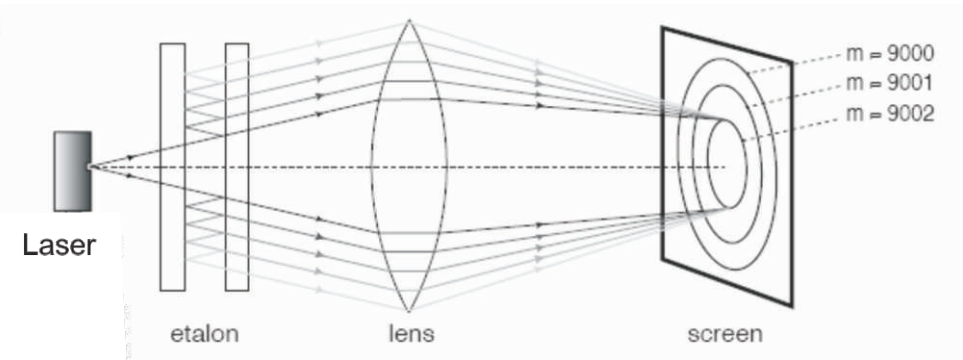

Then the Free Spectral Range of the Etalon Is given by **FSR = c/2d**

Finesse

It is costumary to define a numerical value which characterizes the width – or better the sharpness – of the maxima. This number is called Finesse of an interferometer and defined as the ratio of peak distance to peak halfwidth.

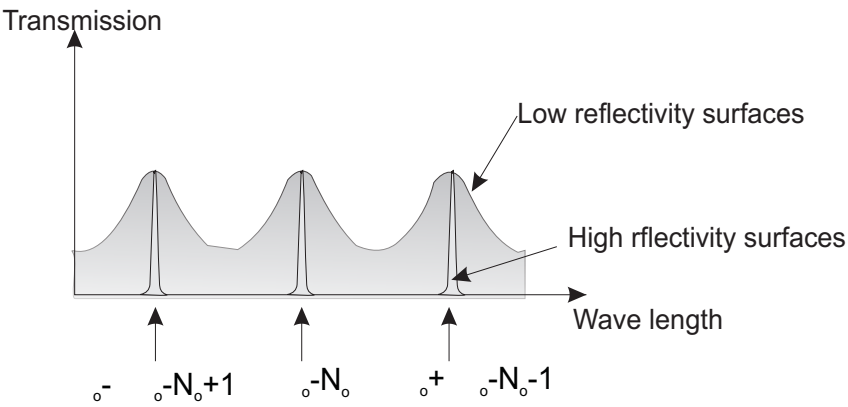

Fabry-Perot transmission as a function of wavelength

This figure shows how the reflectivity of the surfaces affects the transmission. If the reflectivity is relatively low, the maxima in transmission will be broad. On the other hand, if the reflectivity is high, the maxima of transmission will be very narrow and sharp.

This leads to the concept of the finesse of the interferometer. The finesse is a measure of the interferometer's ability to resolve closely spaced spectral lines. The finesse *F* is defined by the following Equation.

$$F = \frac{\pi\sqrt{R}}{1-R}$$

R = The reflectivity of the surfaces.

As the reflectivity approaches unity, the finesse becomes very high. For high reflectivity, the transmission maxima are narrow, so that the transmission of maxima of slightly different wavelengths can be easily distinguished. Because of this capability, the Fabry-Perot interferometer can be used as a high resolution spectrometer. In fact, the resolving power *RP* is given the equation:

$$RP = NF$$

Where
N = The order of the interference.
F = The finesse.

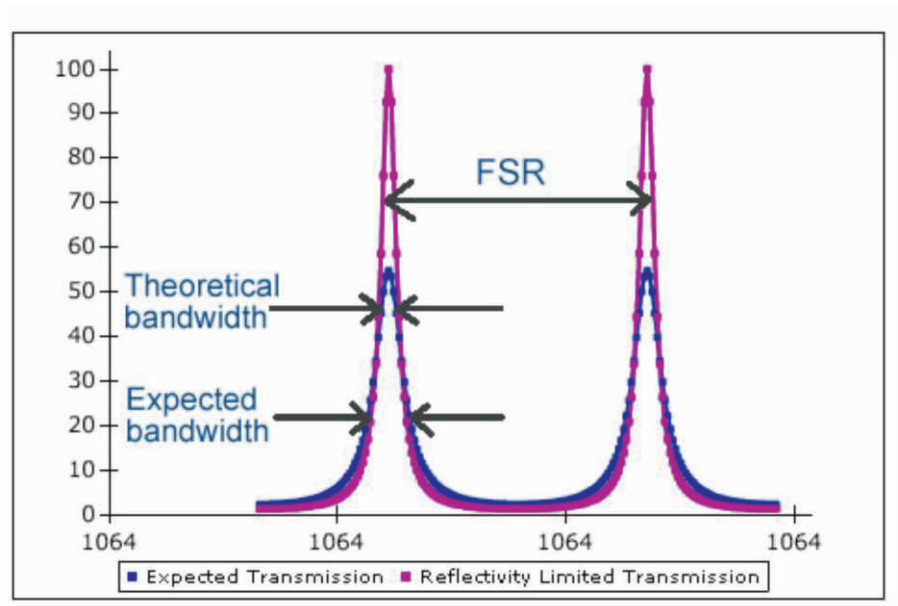

finesse = FSR / bandwidth

$$FWHM = \frac{2(1-R)}{\sqrt{R}},$$

Then

$$F = \frac{FSR}{FWHM} = \frac{\pi\sqrt{R}}{1-R}.$$

Contrast

To rate the suppression between maxima, the Contrast is defined as ratio of peak height to the minimum intensity. The transmission minimum at = and at equivalent phases define a Contrast value C of

From the eqn. Of finesse

$$F = \frac{\pi}{2}\sqrt{Q_R} = \frac{\pi\sqrt{R}}{1-R}$$

Then

C = QR +1

As only the influence of the reflectivity on the linewidth is considered here, often the term Reflectivity Finesse is used to distinguish it from other properties influencing the transfer function

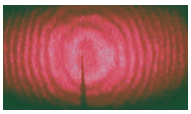

Scattering plate with measuring pointer

Calculations

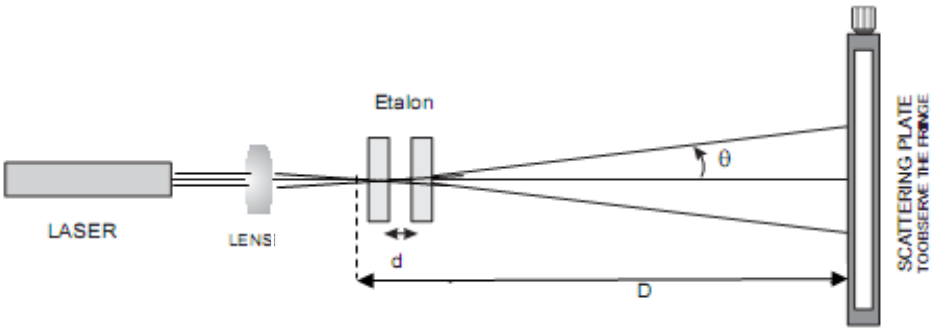

m =

m+1 =

m+2 =

m+3 =

m+4 =

m+5 =

No.	$n^2 = m+n^2 - m^2$ (m^2)	D (m)	$d = nD^2$ (mm) n^2

Mean 'd' =

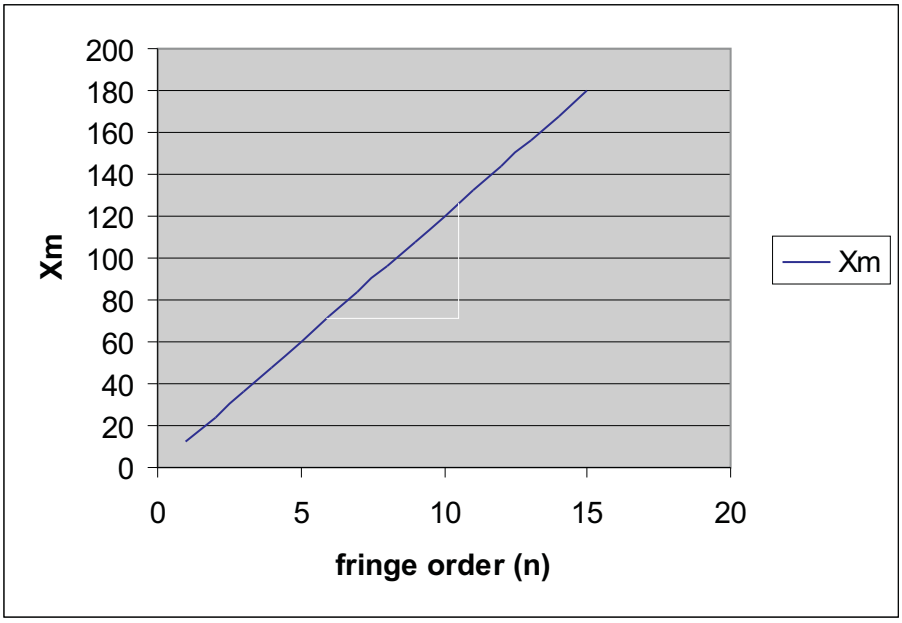

Plot the graph n Vs $_m$ We can find 'd'

$d = nD^2 \quad n^2$

$d/D^2 = 1/slope$

$d = D^2 /slope$

R = mirror reflectivity (fraction of unity)
N = refractive index of cavity
d = distance between mirror surfaces (cavity gap)
c = speed of light
λ = wavelength

Result

The wavelength of laser light = ...650.....nm

The spcing of etalon is d = ...mm

Finesse of the given etalon is *F* = ...

Free Spectral Range of the Etalon Is given by

FSR = c/2d

FSR = ... in Hz

Free Spectral Range (FSR) = **1/2nd** in wavenumbers
Free Spectral Range (FSR) = **c/2nd** in frquency
Free Spectral Range (FSR) = ^{2}**/2nd** in wavelength

Required Reading:

1. Optical Resonators.
2. Types of FP Interferometers.
3. Uses of FP Interferometers

References:

1. P. D. Atherton, N. K. Reay, J. Ring, "Tunable Fabry-Perot Filters", Opt. Engg., Vol 20, 806 (1981).

2. M. Born and E. Wolf, Principles of Optics.

PART B

1. Take an image of the fringes on your phone ensuring proper brightness and contrast.
2. Use ImageJ to analyse the image, so as to obtain a line plot of the fringes – you should be able to obtain Airy profiles after properly integrating the signal.
3. Determine the reflectivity of the mirrors by misaligning the laser beam on the input mirror and measuring the reflected power. Use the powermeter in the lab.
4. Determine the finesse from the measured reflectance.
5. Fit the Airy function for transmittance provided in the manual with the fringes you obtain. Consider L_1 as a variable. Convert the x-axis of your data from pixels to distance by scaling wrt measured diameter of the fringes.
6. Determine the finesse from the fit and compare with that measured from reflectance. For τ_0 in the formula, use the reflectance measurement you have done.
7. Determine the contrast from your fringes – (max/min), and determine finesse again from the relationship between contrast and finesse provided in the manual.
8. From the relationship of resolution and finesse + FSR, determine the latter, by measuring the resolution from the FWHM of the plotted fringes (fit a Lorentzian to the fringes).
9. Compare the finesse and FSR values determined from these processes with that you obtained from that using the fringe diameters given in the manual. Which process has lower error?